AWS Solution Architect Training with
AWS Cloud Practitioner Global Certification

Capstone Projects

Trainer: Aravindraj.G- Nminds Academy

AWS Academy Certified Educator

4.Create an EC2 Linux Instance in AWS

SRILEKA B

CSE-Artificial Intelligence & Machine Learning,

Sri Eshwar College of Engineering,

Coimbatore.

Objective

EC2 (Elastic Compute Cloud) is a core serviceprovided by Amazon Web Services (AWS) that enables users to rent virtual servers in the cloud to run applications, store data, or handle computational workloads.

An EC2 Linux instance is a virtual machine running the Linux operating system on Amazon Web Services (AWS) EC2 (Elastic Compute Cloud). This allows you to run Windows-based applications, manage Windows Server configurations, and use various Microsoft software (like SQL Server, Apache,FileServer etc.) in the cloud without having to manage physical hardware.

Use Cases for EC2 Linux Instances:

- Web and Application Hosting: Run Apache web servers or other Linux-based web applications in the cloud.

  Database Servers: Host SQL Server databases with EC2 Linux instances, using SSH or EC2 for more control.

- Remote Desktop Applications: Set up SSH (Remote Desktop Services) for remote access to Linux desktops in the cloud.

- Development and Testing: Create development environments with linux OS to test php,MySql or other Linux-based applications.

Used Services in AWS

Amazon EC2

Topology

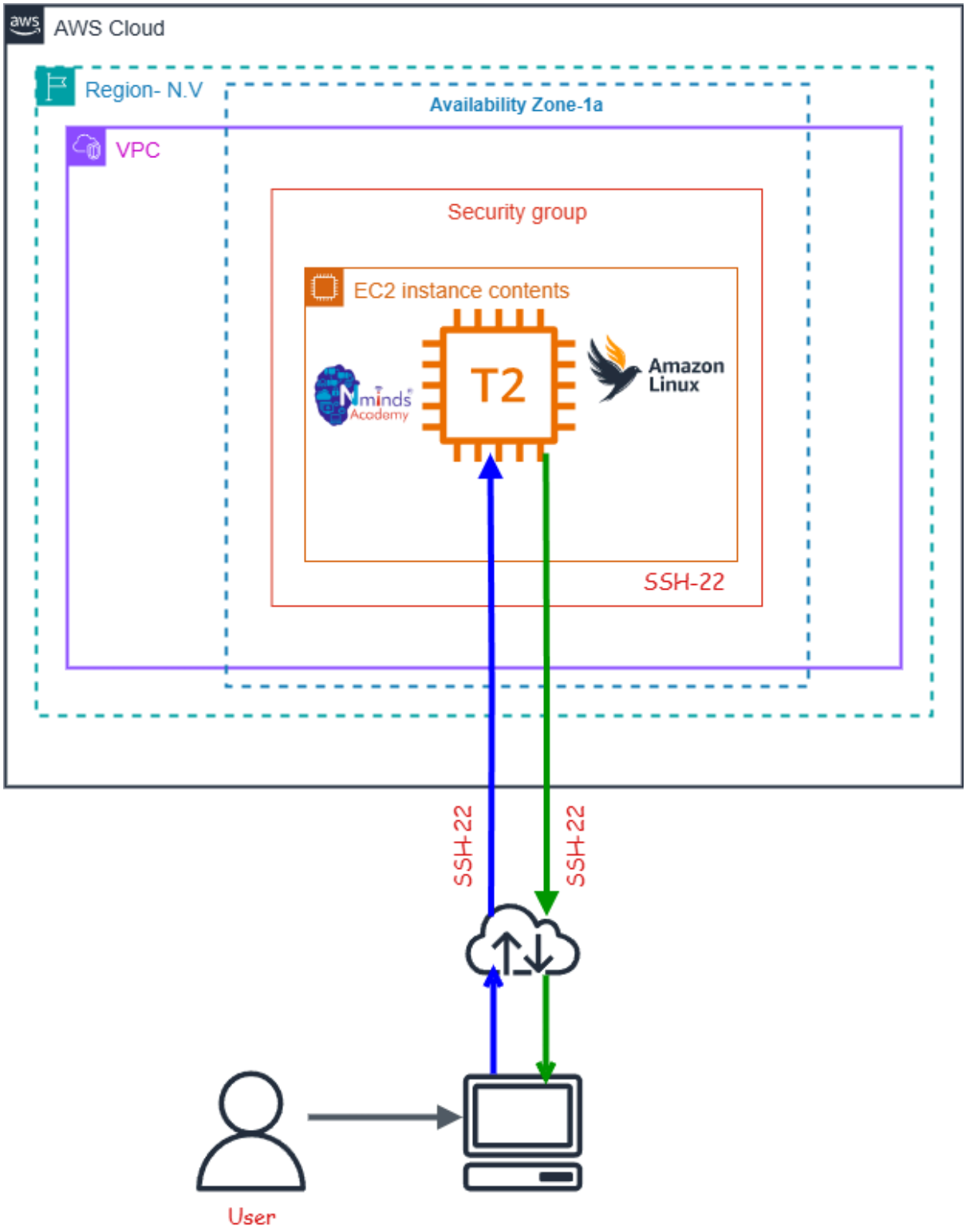

Execution Tasks:

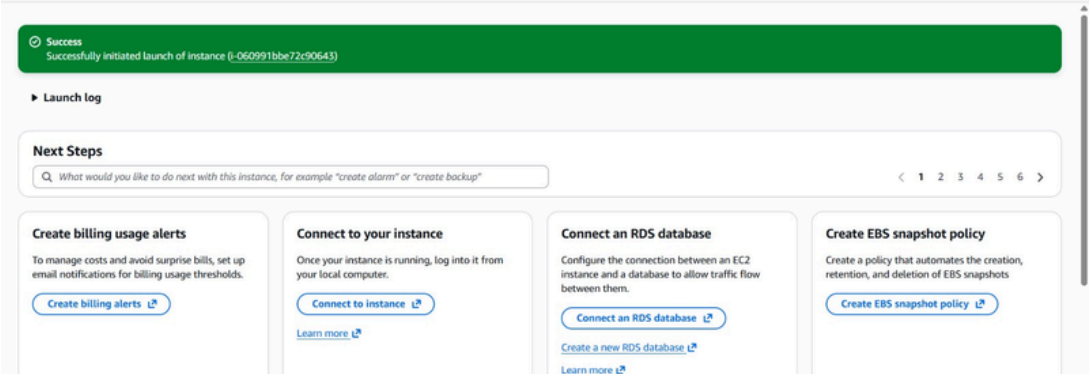
Success
Successfully initiated launch of instance (i-060991bbe72c90643)
Launch log
Next Steps
What would you like to do next with this instance, for example "create alarm" or "create backup"
1 2 3 4 5 6
Create billing usage alerts
To manage costs and avoid surprise bills, set up email notifications for billing usage thresholds.
Create billing alerts
Connect to your instance
Once your instance is running, log into it from your local computer.
Connect to instance
Learn more
Connect an RDS database
Configure the connection between an EC2 instance and a database to allow traffic flow between them.
Connect an RDS database
Create a new RDS database
Learn more
Create EBS snapshot policy
Create a policy that automates the creation, retention, and deletion of EBS snapshots
Create EBS snapshot policy

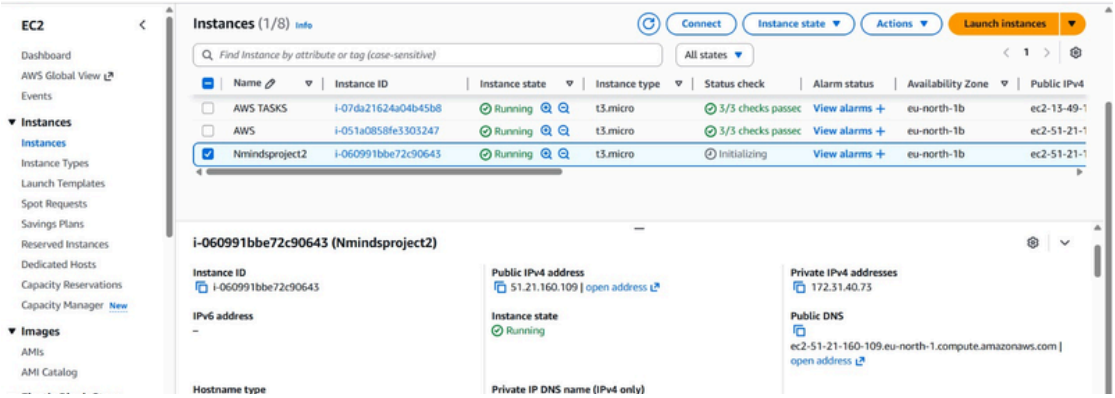
EC2
Dashboard
AWS Global View
Events
Instances
Instances
Instance Types
Launch Templates
Spot Requests
Savings Plans
Reserved Instances
Dedicated Hosts
Capacity Reservations
Capacity Manager New
Images
AMIs
AMI Catalog
Instances (1/8) Info
Connect
Instance state
Actions
Launch instances
Find Instance by attribute or tag (case-sensitive)
All states
Name
Instance ID
Instance state
Instance type
Status check
Alarm status
Availability Zone
Public IPv4
AWS TASKS
i-07da21624a04b45b8
Running
t3.micro
3/3 checks passed
View alarms +
eu-north-1b
AWS
i-051a0858fe3303247
Running
t3.micro
3/3 checks passed
View alarms +
eu-north-1b
Nmindsproject2
i-060991bbe72c90643
Running
t3.micro
Initializing
View alarms +
eu-north-1b
i-060991bbe72c90643 (Nmindsproject2)
Instance ID
i-060991bbe72c90643
IPv6 address
–
Hostname type
Public IPv4 address
51.21.160.109 | open address
Instance state
Running
Private IP DNS name (IPv4 only)
Private IPv4 addresses
172.31.40.73
Public DNS
ec2-51-21-160-109.eu-north-1.compute.amazonaws.com | open address

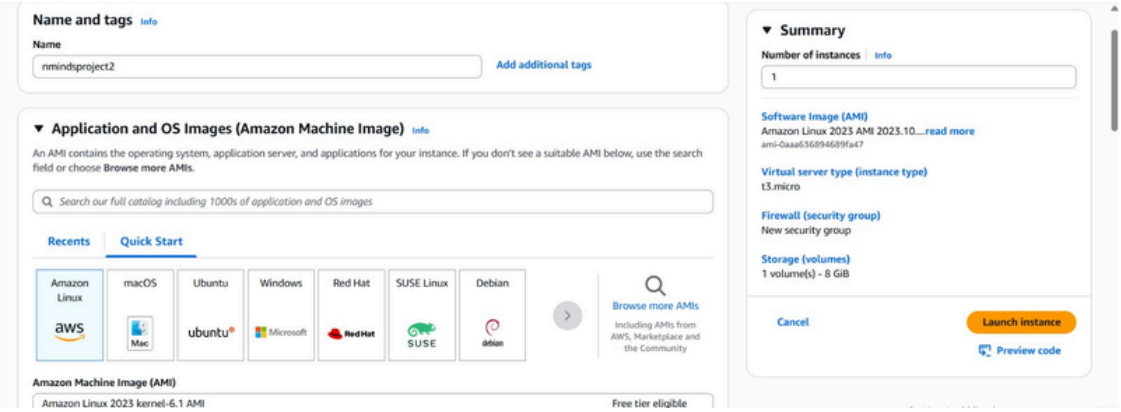
Name and tags Info
Name
nmindsproject2
Add additional tags
Application and OS Images (Amazon Machine Image) Info
An AMI contains the operating system, application server, and applications for your instance. If you don't see a suitable AMI below, use the search field or choose Browse more AMIs.
Search our full catalog including 1000s of application and OS images
Recents
Quick Start
Amazon Linux
macOS
Ubuntu
Windows
Red Hat
SUSE Linux
Debian
Browse more AMIs
Including AMIs from AWS, Marketplace and the Community
Amazon Machine Image (AMI)
Amazon Linux 2023 kernel-6.1 AMI
Free tier eligible
Summary
Number of instances Info
1
Software Image (AMI)
Amazon Linux 2023 AMI 2023.10....read more
ami-0aaa6368946891fa47
Virtual server type (instance type)
t3.micro
Firewall (security group)
New security group
Storage (volumes)
1 volume(s) - 8 GiB
Cancel
Launch instance
Preview code

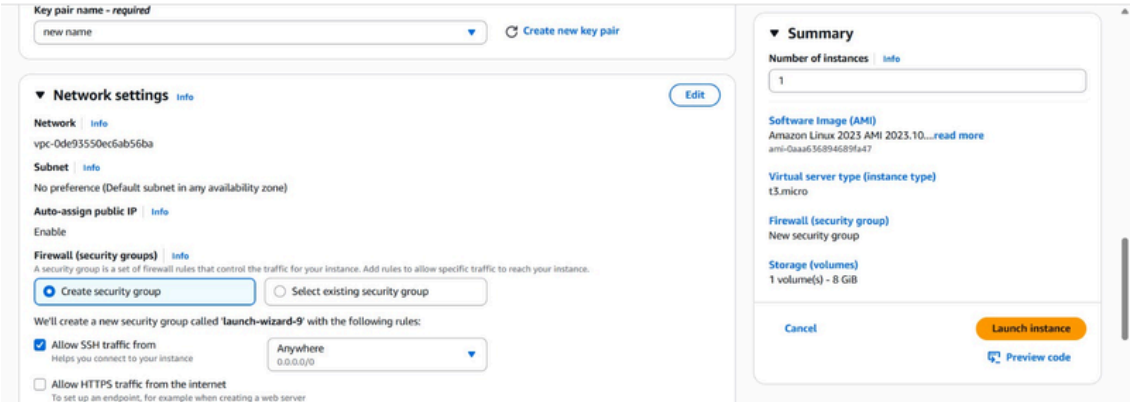
Key pair name - required
new name
Create new key pair
Network settings Info
Edit
Network Info
vpc-0de93550ec6ab56ba
Subnet Info
No preference (Default subnet in any availability zone)
Auto-assign public IP Info
Enable
Firewall (security groups) Info
A security group is a set of firewall rules that control the traffic for your instance. Add rules to allow specific traffic to reach your instance.
Create security group
Select existing security group
We'll create a new security group called 'launch-wizard-9' with the following rules:
Allow SSH traffic from
Helps you connect to your instance
Anywhere
0.0.0.0/0
Allow HTTPS traffic from the internet
To set up an endpoint, for example when creating a web server
Summary
Number of instances Info
1
Software Image (AMI)
Amazon Linux 2023 AMI 2023.10....read more
ami-0aaa6368946891fa47
Virtual server type (instance type)
t3.micro
Firewall (security group)
New security group
Storage (volumes)
1 volume(s) - 8 GiB
Cancel
Launch instance
Preview code